Ball Lock Pins • single acting - comply with NASM / MS17985
EH 4211.

Product Description

Ball Lock Pins according to NASM (former norm: MS) are used for quick fastening, locking, adjusting, changing and securing. Quickly and easily unlockable for frequently repeated connections.
Ball Lock Pins (Quick Release Pins) are produced according to Aviation Norm NASM (former norm: MS) and tested to NAS 1332.

Material

Body
- Stainless steel, precipitation-hardened, passivated

Spindle
- Stainless steel, precipitation-hardened, passivated

Spring
- Stainless steel, passivated

Handle
- Aluminium, black anodised

Attaching ring
- Stainless steel, passivated

Press button
- Stainless steel, passivated

Ball
- Stainless steel, precipitation-hardened, passivated

Operation

Ball lock pins single acting are self-locking and require a push of the button to release the balls.

More information

Notes

All further dimensions are available on request.
Special types on request.
- This product is manufactured in INCH dimensions.

References

A conversion table can be found in the technical data following these product information pages.

Drawing

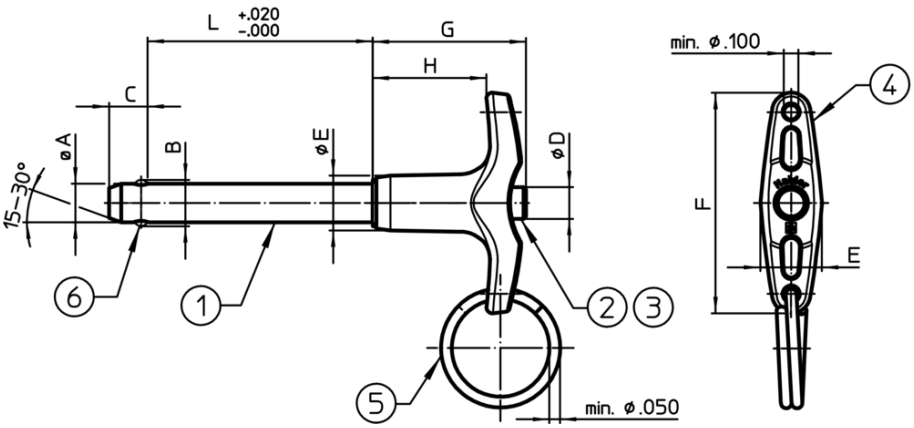

Order information

Nominal diameter A	A min.	A max.	Clamping length L +0.02 0	Dimensions B ±0.005	C 0 -0.04	D max.	E max.	F max.	G max.	H min.	Location hole max.	Shearing resistance, two-shear min.	min.	max.		Standard description	Art. No.
[inch]	[inch]	[inch]	[inch]	[inch]							[inch]	[lbf]	[°F]		[g]		
3/16	0.1870	0.1885	**0.3**	0.220 inch	0.260	0.310	0.500	1.815	1.27	0.800	0.1940	5,150	-65	200	24	**MS17985C303**	4211.A03
3/16	0.1870	0.1885	**0.4**	0.220 inch	0.260	0.310	0.500	1.815	1.27	0.800	0.1940	5,150	-65	200	24	**MS17985C304**	4211.A04
3/16	0.1870	0.1885	**0.5**	0.220 inch	0.260	0.310	0.500	1.815	1.27	0.800	0.1940	5,150	-65	200	24	**MS17985C305**	4211.A05
3/16	0.1870	0.1885	**0.6**	0.220 inch	0.260	0.310	0.500	1.815	1.27	0.800	0.1940	5,150	-65	200	24	**MS17985C306**	4211.A06
3/16	0.1870	0.1885	**0.7**	0.220 inch	0.260	0.310	0.500	1.815	1.27	0.800	0.1940	5,150	-65	200	25	**MS17985C307**	4211.A07
3/16	0.1870	0.1885	**0.8**	0.220 inch	0.260	0.310	0.500	1.815	1.27	0.800	0.1940	5,150	-65	200	25	**MS17985C308**	4211.A08
3/16	0.1870	0.1885	**1.0**	0.220 inch	0.260	0.310	0.500	1.815	1.27	0.800	0.1940	5,150	-65	200	26	**MS17985C310**	4211.A10
3/16	0.1870	0.1885	**1.1**	0.220 inch	0.260	0.310	0.500	1.815	1.27	0.800	0.1940	5,150	-65	200	27	**MS17985C311**	4211.A11
3/16	0.1870	0.1885	**1.2**	0.220 inch	0.260	0.310	0.500	1.815	1.27	0.800	0.1940	5,150	-65	200	27	**MS17985C312**	4211.A12

Nominal diameter A	A min.	A max.	Clamping length L +0.02 0	Dimensions B ±0.005	C 0 -0.04	D max.	E max.	F max.	G max.	H min.	Location hole max.	Shearing resistance, two-shear min.	min.	max.		Standard description	Art. No.
[inch]	[inch]	[inch]	[inch]	[inch]							[inch]	[lbf]	[°F]		[g]		
3/16	0.1870	0.1885	**1.3**	0.220 inch	0.260	0.310	0.500	1.815	1.27	0.800	0.1940	5,150	-65	200	27	**MS17985C313**	**4211.A13**
3/16	0.1870	0.1885	**1.4**	0.220 inch	0.260	0.310	0.500	1.815	1.27	0.800	0.1940	5,150	-65	200	25	**MS17985C314**	**4211.A14**
3/16	0.1870	0.1885	**1.5**	0.220 inch	0.260	0.310	0.500	1.815	1.27	0.800	0.1940	5,150	-65	200	27	**MS17985C315**	**4211.A15**
3/16	0.1870	0.1885	**2.0**	0.220 inch	0.260	0.310	0.500	1.815	1.27	0.800	0.1940	5,150	-65	200	28	**MS17985C320**	**4211.A20**
3/16	0.1870	0.1885	**2.1**	0.220 inch	0.260	0.310	0.500	1.815	1.27	0.800	0.1940	5,150	-65	200	28	**MS17985C321**	**4211.A21**
3/16	0.1870	0.1885	**2.2**	0.220 inch	0.260	0.310	0.500	1.815	1.27	0.800	0.1940	5,150	-65	200	30	**MS17985C322**	**4211.A22**
3/16	0.1870	0.1885	**2.3**	0.220 inch	0.260	0.310	0.500	1.815	1.27	0.800	0.1940	5,150	-65	200	30	**MS17985C323**	**4211.A23**
3/16	0.1870	0.1885	**2.5**	0.220 inch	0.260	0.310	0.500	1.815	1.27	0.800	0.1940	5,150	-65	200	32	**MS17985C325**	**4211.A25**
3/16	0.1870	0.1885	**2.6**	0.220 inch	0.260	0.310	0.500	1.815	1.27	0.800	0.1940	5,150	-65	200	33	**MS17985C326**	**4211.A26**
3/16	0.1870	0.1885	**4.5**	0.220 inch	0.260	0.310	0.500	1.815	1.27	0.800	0.1940	5,150	-65	200	–	**MS17985C345**	**4211.A45**
1/4	0.2470	0.2485	**0.5**	0.289 inch	0.290	0.310	0.500	1.815	1.27	0.800	0.2540	9,200	-65	200	26	**MS17985C405**	**4211.B05**
1/4	0.2470	0.2485	**0.6**	0.289 inch	0.290	0.310	0.500	1.815	1.27	0.800	0.2540	9,200	-65	200	27	**MS17985C406**	**4211.B06**
1/4	0.2470	0.2485	**0.7**	0.289 inch	0.290	0.310	0.500	1.815	1.27	0.800	0.2540	9,200	-65	200	27	**MS17985C407**	**4211.B07**
1/4	0.2470	0.2485	**0.8**	0.289 inch	0.290	0.310	0.500	1.815	1.27	0.800	0.2540	9,200	-65	200	28	**MS17985C408**	**4211.B08**
1/4	0.2470	0.2485	**0.9**	0.289 inch	0.290	0.310	0.500	1.815	1.27	0.800	0.2540	9,200	-65	200	29	**MS17985C409**	**4211.B09**
1/4	0.2470	0.2485	**1.0**	0.289 inch	0.290	0.310	0.500	1.815	1.27	0.800	0.2540	9,200	-65	200	27	**MS17985C410**	**4211.B10**
1/4	0.2470	0.2485	**1.1**	0.289 inch	0.290	0.310	0.500	1.815	1.27	0.800	0.2540	9,200	-65	200	30	**MS17985C411**	**4211.B11**
1/4	0.2470	0.2485	**1.2**	0.289 inch	0.290	0.310	0.500	1.815	1.27	0.800	0.2540	9,200	-65	200	31	**MS17985C412**	**4211.B12**
1/4	0.2470	0.2485	**1.3**	0.289 inch	0.290	0.310	0.500	1.815	1.27	0.800	0.2540	9,200	-65	200	31	**MS17985C413**	**4211.B13**
1/4	0.2470	0.2485	**1.4**	0.289 inch	0.290	0.310	0.500	1.815	1.27	0.800	0.2540	9,200	-65	200	32	**MS17985C414**	**4211.B14**
1/4	0.2470	0.2485	**1.5**	0.289 inch	0.290	0.310	0.500	1.815	1.27	0.800	0.2540	9,200	-65	200	32	**MS17985C415**	**4211.B15**
1/4	0.2470	0.2485	**1.6**	0.289 inch	0.290	0.310	0.500	1.815	1.27	0.800	0.2540	9,200	-65	200	33	**MS17985C416**	**4211.B16**
1/4	0.2470	0.2485	**1.7**	0.289 inch	0.290	0.310	0.500	1.815	1.27	0.800	0.2540	9,200	-65	200	33	**MS17985C417**	**4211.B17**
1/4	0.2470	0.2485	**1.8**	0.289 inch	0.290	0.310	0.500	1.815	1.27	0.800	0.2540	9,200	-65	200	34	**MS17985C418**	**4211.B18**
1/4	0.2470	0.2485	**2.0**	0.289 inch	0.290	0.310	0.500	1.815	1.27	0.800	0.2540	9,200	-65	200	33	**MS17985C420**	**4211.B20**
1/4	0.2470	0.2485	**2.1**	0.289 inch	0.290	0.310	0.500	1.815	1.27	0.800	0.2540	9,200	-65	200	34	**MS17985C421**	**4211.B21**
1/4	0.2470	0.2485	**2.3**	0.289 inch	0.290	0.310	0.500	1.815	1.27	0.800	0.2540	9,200	-65	200	37	**MS17985C423**	**4211.B23**
1/4	0.2470	0.2485	**2.4**	0.289 inch	0.290	0.310	0.500	1.815	1.27	0.800	0.2540	9,200	-65	200	38	**MS17985C424**	**4211.B24**
1/4	0.2470	0.2485	**2.5**	0.289 inch	0.290	0.310	0.500	1.815	1.27	0.800	0.2540	9,200	-65	200	39	**MS17985C425**	**4211.B25**
1/4	0.2470	0.2485	**2.6**	0.289 inch	0.290	0.310	0.500	1.815	1.27	0.800	0.2540	9,200	-65	200	40	**MS17985C426**	**4211.B26**
1/4	0.2470	0.2485	**2.7**	0.289 inch	0.290	0.310	0.500	1.815	1.27	0.800	0.2540	9,200	-65	200	40	**MS17985C426**	**4211.B27**
1/4	0.2470	0.2485	**2.8**	0.289 inch	0.290	0.310	0.500	1.815	1.27	0.800	0.2540	9,200	-65	200	41	**MS17985C428**	**4211.B28**
1/4	0.2470	0.2485	**2.9**	0.289 inch	0.290	0.310	0.500	1.815	1.27	0.800	0.2540	9,200	-65	200	41	**MS17985C429**	**4211.B29**
1/4	0.2470	0.2485	**3.0**	0.289 inch	0.290	0.310	0.500	1.815	1.27	0.800	0.2540	9,200	-65	200	39	**MS17985C430**	**4211.B30**
1/4	0.2470	0.2485	**3.1**	0.289 inch	0.290	0.310	0.500	1.815	1.27	0.800	0.2540	9,200	-65	200	43	**MS17985C431**	**4211.B31**
1/4	0.2470	0.2485	**3.2**	0.289 inch	0.290	0.310	0.500	1.815	1.27	0.800	0.2540	9,200	-65	200	43	**MS17985C432**	**4211.B32**
1/4	0.2470	0.2485	**3.5**	0.289 inch	0.290	0.310	0.500	1.815	1.27	0.800	0.2540	9,200	-65	200	42	**MS17985C435**	**4211.B35**
1/4	0.2470	0.2485	**4.0**	0.289 inch	0.290	0.310	0.500	1.815	1.27	0.800	0.2540	9,200	-65	200	48	**MS17985C440**	**4211.B40**
1/4	0.2470	0.2485	**5.0**	0.289 inch	0.290	0.310	0.500	1.815	1.27	0.800	0.2540	9,200	-65	200	57	**MS17985C450**	**4211.B50**
1/4	0.2470	0.2485	**5.2**	0.289 inch	0.290	0.310	0.500	1.815	1.27	0.800	0.2540	9,200	-65	200	59	**MS17985C452**	**4211.B52**
1/4	0.2470	0.2485	**6.0**	0.289 inch	0.290	0.310	0.500	1.815	1.27	0.800	0.2540	9,200	-65	200	64	**MS17985C460**	**4211.B60**
5/16	0.3095	0.3110	**0.3**	0.375 inch	0.330	0.310	0.500	1.815	1.27	0.800	0.3165	14,400	-65	200	27	**MS17985C503**	**4211.C03**
5/16	0.3095	0.3110	**0.4**	0.375 inch	0.330	0.310	0.500	1.815	1.27	0.800	0.3165	14,400	-65	200	28	**MS17985C504**	**4211.C04**
5/16	0.3095	0.3110	**0.5**	0.375 inch	0.330	0.310	0.500	1.815	1.27	0.800	0.3165	14,400	-65	200	30	**MS17985C505**	**4211.C05**
5/16	0.3095	0.3110	**0.6**	0.375 inch	0.330	0.310	0.500	1.815	1.27	0.800	0.3165	14,400	-65	200	30	**MS17985C506**	**4211.C06**
5/16	0.3095	0.3110	**0.8**	0.375 inch	0.330	0.310	0.500	1.815	1.27	0.800	0.3165	14,400	-65	200	32	**MS17985C508**	**4211.C08**
5/16	0.3095	0.3110	**0.9**	0.375 inch	0.330	0.310	0.500	1.815	1.27	0.800	0.3165	14,400	-65	200	33	**MS17985C509**	**4211.C09**
5/16	0.3095	0.3110	**1.0**	0.375 inch	0.330	0.310	0.500	1.815	1.27	0.800	0.3165	14,400	-65	200	34	**MS17985C510**	**4211.C10**
5/16	0.3095	0.3110	**1.1**	0.375 inch	0.330	0.310	0.500	1.815	1.27	0.800	0.3165	14,400	-65	200	35	**MS17985C511**	**4211.C11**
5/16	0.3095	0.3110	**1.2**	0.375 inch	0.330	0.310	0.500	1.815	1.27	0.800	0.3165	14,400	-65	200	36	**MS17985C512**	**4211.C12**
5/16	0.3095	0.3110	**1.3**	0.375 inch	0.330	0.310	0.500	1.815	1.27	0.800	0.3165	14,400	-65	200	37	**MS17985C513**	**4211.C13**
5/16	0.3095	0.3110	**1.5**	0.375 inch	0.330	0.310	0.500	1.815	1.27	0.800	0.3165	14,400	-65	200	38	**MS17985C515**	**4211.C15**
5/16	0.3095	0.3110	**1.6**	0.375 inch	0.330	0.310	0.500	1.815	1.27	0.800	0.3165	14,400	-65	200	39	**MS17985C516**	**4211.C16**
5/16	0.3095	0.3110	**1.8**	0.375 inch	0.330	0.310	0.500	1.815	1.27	0.800	0.3165	14,400	-65	200	41	**MS17985C518**	**4211.C18**
5/16	0.3095	0.3110	**2.0**	0.375 inch	0.330	0.310	0.500	1.815	1.27	0.800	0.3165	14,400	-65	200	43	**MS17985C520**	**4211.C20**
5/16	0.3095	0.3110	**2.2**	0.375 inch	0.330	0.310	0.500	1.815	1.27	0.800	0.3165	14,400	-65	200	46	**MS17985C522**	**4211.C22**
5/16	0.3095	0.3110	**2.3**	0.375 inch	0.330	0.310	0.500	1.815	1.27	0.800	0.3165	14,400	-65	200	47	**MS17985C523**	**4211.C23**
5/16	0.3095	0.3110	**2.4**	0.375 inch	0.330	0.310	0.500	1.815	1.27	0.800	0.3165	14,400	-65	200	48	**MS17985C524**	**4211.C24**
5/16	0.3095	0.3110	**2.6**	0.375 inch	0.330	0.310	0.500	1.815	1.27	0.800	0.3165	14,400	-65	200	50	**MS17985C526**	**4211.C26**
5/16	0.3095	0.3110	**2.8**	0.375 inch	0.330	0.310	0.500	1.815	1.27	0.800	0.3165	14,400	-65	200	51	**MS17985C528**	**4211.C28**

Nominal diameter A	A min.	A max.	Clamping length L +0.02 0	Dimensions B ±0.005	C 0 -0.04	D max.	E max.	F max.	G max.	H min.	Location hole max.	Shearing resistance, two-shear min.	min.	max.		Standard description	Art. No.
[inch]	[inch]	[inch]	[inch]	[inch]							[inch]	[lbf]	[°F]		[g]		
5/16	0.3095	0.3110	**2.9**	0.375 inch	0.330	0.310	0.500	1.815	1.27	0.800	0.3165	14,400	-65	200	53	**MS17985C529**	**4211.C29**
5/16	0.3095	0.3110	**3.0**	0.375 inch	0.330	0.310	0.500	1.815	1.27	0.800	0.3165	14,400	-65	200	53	**MS17985C530**	**4211.C30**
5/16	0.3095	0.3110	**3.2**	0.375 inch	0.330	0.310	0.500	1.815	1.27	0.800	0.3165	14,400	-65	200	55	**MS17985C532**	**4211.C32**
5/16	0.3095	0.3110	**3.3**	0.375 inch	0.330	0.310	0.500	1.815	1.27	0.800	0.3165	14,400	-65	200	56	**MS17985C533**	**4211.C33**
5/16	0.3095	0.3110	**3.4**	0.375 inch	0.330	0.310	0.500	1.815	1.27	0.800	0.3165	14,400	-65	200	56	**MS17985C534**	**4211.C34**
5/16	0.3095	0.3110	**3.5**	0.375 inch	0.330	0.310	0.500	1.815	1.27	0.800	0.3165	14,400	-65	200	57	**MS17985C535**	**4211.C35**
5/16	0.3095	0.3110	**3.8**	0.375 inch	0.330	0.310	0.500	1.815	1.27	0.800	0.3165	14,400	-65	200	–	**MS17985C538**	**4211.C38**
5/16	0.3095	0.3110	**4.2**	0.375 inch	0.330	0.310	0.500	1.815	1.27	0.800	0.3165	14,400	-65	200	–	**MS17985C542**	**4211.C42**
5/16	0.3095	0.3110	**4.3**	0.375 inch	0.330	0.310	0.500	1.815	1.27	0.800	0.3165	14,400	-65	200	–	**MS17985C543**	**4211.C43**
5/16	0.3095	0.3110	**4.0**	0.375 inch	0.330	0.310	0.500	1.815	1.27	0.800	0.3165	14,400	-65	200	62	**MS17985C540**	**4211.C40**
5/16	0.3095	0.3110	**5.0**	0.375 inch	0.330	0.310	0.500	1.815	1.27	0.800	0.3165	14,400	-65	200	75	**MS17985C550**	**4211.C50**
5/16	0.3095	0.3110	**6.0**	0.375 inch	0.330	0.310	0.500	1.815	1.27	0.800	0.3165	14,400	-65	200	85	**MS17985C560**	**4211.C60**
5/16	0.3095	0.3110	**6.4**	0.375 inch	0.330	0.310	0.500	1.815	1.27	0.800	0.3165	14,400	-65	200	89	**MS17985C564**	**4211.C64**
5/16	0.3095	0.3110	**7.0**	0.375 inch	0.330	0.310	0.500	1.815	1.27	0.800	0.3165	14,400	-65	200	93	**MS17985C570**	**4211.C70**
3/8	0.3720	0.3735	**0.9**	0.440 inch	0.365	0.390	0.625	2.065	1.45	0.850	0.3790	20,700	-65	200	49	**MS17985C609**	**4211.D09**
3/8	0.3720	0.3735	**0.5**	0.440 inch	0.365	0.390	0.625	2.065	1.45	0.850	0.3790	20,700	-65	200	43	**MS17985C605**	**4211.D05**
3/8	0.3720	0.3735	**0.7**	0.440 inch	0.365	0.390	0.625	2.065	1.45	0.850	0.3790	20,700	-65	200	45	**MS17985C607**	**4211.D07**
3/8	0.3720	0.3735	**0.8**	0.440 inch	0.365	0.390	0.625	2.065	1.45	0.850	0.3790	20,700	-65	200	47	**MS17985C608**	**4211.D08**
3/8	0.3720	0.3735	**1.0**	0.440 inch	0.365	0.390	0.625	2.065	1.45	0.850	0.3790	20,700	-65	200	50	**MS17985C610**	**4211.D10**
3/8	0.3720	0.3735	**1.1**	0.440 inch	0.365	0.390	0.625	2.065	1.45	0.850	0.3790	20,700	-65	200	50	**MS17985C611**	**4211.D11**
3/8	0.3720	0.3735	**1.2**	0.440 inch	0.365	0.390	0.625	2.065	1.45	0.850	0.3790	20,700	-65	200	55	**MS17985C612**	**4211.D12**
3/8	0.3720	0.3735	**1.3**	0.440 inch	0.365	0.390	0.625	2.065	1.45	0.850	0.3790	20,700	-65	200	56	**MS17985C613**	**4211.D13**
3/8	0.3720	0.3735	**1.4**	0.440 inch	0.365	0.390	0.625	2.065	1.45	0.850	0.3790	20,700	-65	200	57	**MS17985C614**	**4211.D14**
3/8	0.3720	0.3735	**1.5**	0.440 inch	0.365	0.390	0.625	2.065	1.45	0.850	0.3790	20,700	-65	200	55	**MS17985C615**	**4211.D15**
3/8	0.3720	0.3735	**1.6**	0.440 inch	0.365	0.390	0.625	2.065	1.45	0.850	0.3790	20,700	-65	200	58	**MS17985C616**	**4211.D16**
3/8	0.3720	0.3735	**1.7**	0.440 inch	0.365	0.390	0.625	2.065	1.45	0.850	0.3790	20,700	-65	200	60	**MS17985C617**	**4211.D17**
3/8	0.3720	0.3735	**1.8**	0.440 inch	0.365	0.390	0.625	2.065	1.45	0.850	0.3790	20,700	-65	200	62	**MS17985C618**	**4211.D18**
3/8	0.3720	0.3735	**1.9**	0.440 inch	0.365	0.390	0.625	2.065	1.45	0.850	0.3790	20,700	-65	200	63	**MS17985C619**	**4211.D19**
3/8	0.3720	0.3735	**2.0**	0.440 inch	0.365	0.390	0.625	2.065	1.45	0.850	0.3790	20,700	-65	200	62	**MS17985C620**	**4211.D20**
3/8	0.3720	0.3735	**2.1**	0.440 inch	0.365	0.390	0.625	2.065	1.45	0.850	0.3790	20,700	-65	200	67	**MS17985C621**	**4211.D21**
3/8	0.3720	0.3735	**2.2**	0.440 inch	0.365	0.390	0.625	2.065	1.45	0.850	0.3790	20,700	-65	200	69	**MS17985C622**	**4211.D22**
3/8	0.3720	0.3735	**2.4**	0.440 inch	0.365	0.390	0.625	2.065	1.45	0.850	0.3790	20,700	-65	200	70	**MS17985C624**	**4211.D24**
3/8	0.3720	0.3735	**2.5**	0.440 inch	0.365	0.390	0.625	2.065	1.45	0.850	0.3790	20,700	-65	200	72	**MS17985C625**	**4211.D25**
3/8	0.3720	0.3735	**2.6**	0.440 inch	0.365	0.390	0.625	2.065	1.45	0.850	0.3790	20,700	-65	200	70	**MS17985C626**	**4211.D26**
3/8	0.3720	0.3735	**2.8**	0.440 inch	0.365	0.390	0.625	2.065	1.45	0.850	0.3790	20,700	-65	200	72	**MS17985C628**	**4211.D28**
3/8	0.3720	0.3735	**3.0**	0.440 inch	0.365	0.390	0.625	2.065	1.45	0.850	0.3790	20,700	-65	200	75	**MS17985C630**	**4211.D30**
3/8	0.3720	0.3735	**3.1**	0.440 inch	0.365	0.390	0.625	2.065	1.45	0.850	0.3790	20,700	-65	200	80	**MS17985C631**	**4211.D31**
3/8	0.3720	0.3735	**3.2**	0.440 inch	0.365	0.390	0.625	2.065	1.45	0.850	0.3790	20,700	-65	200	80	**MS17985C632**	**4211.D32**
3/8	0.3720	0.3735	**3.4**	0.440 inch	0.365	0.390	0.625	2.065	1.45	0.850	0.3790	20,700	-65	200	83	**MS17985C634**	**4211.D34**
3/8	0.3720	0.3735	**3.5**	0.440 inch	0.365	0.390	0.625	2.065	1.45	0.850	0.3790	20,700	-65	200	85	**MS17985C635**	**4211.D35**
3/8	0.3720	0.3735	**4.0**	0.440 inch	0.365	0.390	0.625	2.065	1.45	0.850	0.3790	20,700	-65	200	95	**MS17985C640**	**4211.D40**
3/8	0.3720	0.3735	**4.5**	0.440 inch	0.365	0.390	0.625	2.065	1.45	0.850	0.3790	20,700	-65	200	100	**MS17985C645**	**4211.D45**
3/8	0.3720	0.3735	**4.8**	0.440 inch	0.365	0.390	0.625	2.065	1.45	0.850	0.3790	20,700	-65	200	–	**MS17985C648**	**4211.D48**
3/8	0.3720	0.3735	**5.0**	0.440 inch	0.365	0.390	0.625	2.065	1.45	0.850	0.3790	20,700	-65	200	–	**MS17985C650**	**4211.D50**
3/8	0.3720	0.3735	**5.5**	0.440 inch	0.365	0.390	0.625	2.065	1.45	0.850	0.3790	20,700	-65	200	–	**MS17985C655**	**4211.D55**
3/8	0.3720	0.3735	**6.0**	0.440 inch	0.365	0.390	0.625	2.065	1.45	0.850	0.3790	20,700	-65	200	–	**MS17985C660**	**4211.D60**
7/16	0.4345	0.4360	**0.8**	0.509 inch	0.380	0.390	0.625	2.065	1.47	0.850	0.4425	28,500	-65	200	54	**MS17985C708**	**4211.E08**
7/16	0.4345	0.4360	**1.0**	0.509 inch	0.380	0.390	0.625	2.065	1.47	0.850	0.4425	28,500	-65	200	57	**MS17985C710**	**4211.E10**
7/16	0.4345	0.4360	**1.1**	0.509 inch	0.380	0.390	0.625	2.065	1.47	0.850	0.4425	28,500	-65	200	59	**MS17985C711**	**4211.E11**
7/16	0.4345	0.4360	**1.2**	0.509 inch	0.380	0.390	0.625	2.065	1.47	0.850	0.4425	28,500	-65	200	61	**MS17985C712**	**4211.E12**
7/16	0.4345	0.4360	**1.5**	0.509 inch	0.380	0.390	0.625	2.065	1.47	0.850	0.4425	28,500	-65	200	66	**MS17985C715**	**4211.E15**
7/16	0.4345	0.4360	**1.8**	0.509 inch	0.380	0.390	0.625	2.065	1.47	0.850	0.4425	28,500	-65	200	72	**MS17985C718**	**4211.E18**
7/16	0.4345	0.4360	**2.0**	0.509 inch	0.380	0.390	0.625	2.065	1.47	0.850	0.4425	28,500	-65	200	76	**MS17985C720**	**4211.E20**
7/16	0.4345	0.4360	**2.1**	0.509 inch	0.380	0.390	0.625	2.065	1.47	0.850	0.4425	28,500	-65	200	–	**MS17985C720**	**4211.E21**
7/16	0.4345	0.4360	**2.3**	0.509 inch	0.380	0.390	0.625	2.065	1.47	0.850	0.4425	28,500	-65	200	82	**MS17985C723**	**4211.E23**
7/16	0.4345	0.4360	**2.4**	0.509 inch	0.380	0.390	0.625	2.065	1.47	0.850	0.4425	28,500	-65	200	84	**MS17985C724**	**4211.E24**
7/16	0.4345	0.4360	**2.5**	0.509 inch	0.380	0.390	0.625	2.065	1.47	0.850	0.4425	28,500	-65	200	90	**MS17985C725**	**4211.E25**
7/16	0.4345	0.4360	**2.6**	0.509 inch	0.380	0.390	0.625	2.065	1.47	0.850	0.4425	28,500	-65	200	88	**MS17985C726**	**4211.E26**
7/16	0.4345	0.4360	**2.8**	0.509 inch	0.380	0.390	0.625	2.065	1.47	0.850	0.4425	28,500	-65	200	90	**MS17985C728**	**4211.E28**
7/16	0.4345	0.4360	**2.9**	0.509 inch	0.380	0.390	0.625	2.065	1.47	0.850	0.4425	28,500	-65	200	93	**MS17985C729**	**4211.E29**

Nominal diameter A	A min.	A max.	Clamping length L +0.02 0	Dimensions B ±0.005	C 0 -0.04	D max.	E max.	F max.	G max.	H min.	Location hole max.	Shearing resistance, two-shear min.	min.	max.		Standard description	Art. No.
[inch]	[inch]	[inch]	[inch]	[inch]							[inch]	[lbf]	[°F]		[g]		
7/16	0.4345	0.4360	**3.0**	0.509 inch	0.380	0.390	0.625	2.065	1.47	0.850	0.4425	28,500	-65	200	95	**MS17985C730**	4211.E30
7/16	0.4345	0.4360	**3.1**	0.509 inch	0.380	0.390	0.625	2.065	1.47	0.850	0.4425	28,500	-65	200	97	**MS17985C731**	4211.E31
7/16	0.4345	0.4360	**3.2**	0.509 inch	0.380	0.390	0.625	2.065	1.47	0.850	0.4425	28,500	-65	200	99	**MS17985C732**	4211.E32
7/16	0.4345	0.4360	**3.6**	0.509 inch	0.380	0.390	0.625	2.065	1.47	0.850	0.4425	28,500	-65	200	106	**MS17985C736**	4211.E36
7/16	0.4345	0.4360	**4.0**	0.509 inch	0.380	0.390	0.625	2.065	1.47	0.850	0.4425	28,500	-65	200	113	**MS17985C740**	4211.E40
7/16	0.4345	0.4360	**4.2**	0.509 inch	0.380	0.390	0.625	2.065	1.47	0.850	0.4425	28,500	-65	200	117	**MS17985C742**	4211.E42
7/16	0.4345	0.4360	**4.6**	0.509 inch	0.380	0.390	0.625	2.065	1.47	0.850	0.4425	28,500	-65	200	–	**MS17985C746**	4211.E46
7/16	0.4345	0.4360	**5.0**	0.509 inch	0.380	0.390	0.625	2.065	1.47	0.850	0.4425	28,500	-65	200	–	**MS17985C750**	4211.E50
7/16	0.4345	0.4360	**5.3**	0.509 inch	0.380	0.390	0.625	2.065	1.47	0.850	0.4425	28,500	-65	200	–	**MS17985C753**	4211.E53
7/16	0.4345	0.4360	**5.5**	0.509 inch	0.380	0.390	0.625	2.065	1.47	0.850	0.4425	28,500	-65	200	145	**MS17985C755**	4211.E55
7/16	0.4345	0.4360	**5.6**	0.509 inch	0.380	0.390	0.625	2.065	1.47	0.850	0.4425	28,500	-65	200	145	**MS17985C756**	4211.E56
7/16	0.4345	0.4360	**7.2**	0.509 inch	0.380	0.390	0.625	2.065	1.60	0.850	0.4425	28,500	-65	200	176	**MS17985C772**	4211.E72
1/2	0.4970	0.4985	**0.8**	0.594 inch	0.460	0.565	0.800	2.345	1.60	0.885	0.5050	36,900	-65	200	78	**MS17985C808**	4211.F08
1/2	0.4970	0.4985	**0.9**	0.594 inch	0.460	0.565	0.800	2.345	1.60	0.885	0.5050	36,900	-65	200	80	**MS17985C809**	4211.F09
1/2	0.4970	0.4985	**1.0**	0.594 inch	0.460	0.565	0.800	2.345	1.60	0.885	0.5050	36,900	-65	200	82	**MS17985C810**	4211.F10
1/2	0.4970	0.4985	**1.1**	0.594 inch	0.460	0.565	0.800	2.345	1.60	0.885	0.5050	36,900	-65	200	85	**MS17985C811**	4211.F11
1/2	0.4970	0.4985	**1.2**	0.594 inch	0.460	0.565	0.800	2.345	1.60	0.885	0.5050	36,900	-65	200	87	**MS17985C812**	4211.F12
1/2	0.4970	0.4985	**1.3**	0.594 inch	0.460	0.565	0.800	2.345	1.60	0.885	0.5050	36,900	-65	200	90	**MS17985C813**	4211.F13
1/2	0.4970	0.4985	**1.4**	0.594 inch	0.460	0.565	0.800	2.345	1.60	0.885	0.5050	36,900	-65	200	94	**MS17985C814**	4211.F14
1/2	0.4970	0.4985	**1.5**	0.594 inch	0.460	0.565	0.800	2.345	1.60	0.885	0.5050	36,900	-65	200	94	**MS17985C815**	4211.F15
1/2	0.4970	0.4985	**1.6**	0.594 inch	0.460	0.565	0.800	2.345	1.60	0.885	0.5050	36,900	-65	200	97	**MS17985C816**	4211.F16
1/2	0.4970	0.4985	**1.7**	0.594 inch	0.460	0.565	0.800	2.345	1.60	0.885	0.5050	36,900	-65	200	101	**MS17985C817**	4211.F17
1/2	0.4970	0.4985	**1.8**	0.594 inch	0.460	0.565	0.800	2.345	1.60	0.885	0.5050	36,900	-65	200	106	**MS17985C818**	4211.F18
1/2	0.4970	0.4985	**1.9**	0.594 inch	0.460	0.565	0.800	2.345	1.60	0.885	0.5050	36,900	-65	200	106	**MS17985C819**	4211.F19
1/2	0.4970	0.4985	**2.0**	0.594 inch	0.460	0.565	0.800	2.345	1.60	0.885	0.5050	36,900	-65	200	108	**MS17985C820**	4211.F20
1/2	0.4970	0.4985	**2.1**	0.594 inch	0.460	0.565	0.800	2.345	1.60	0.885	0.5050	36,900	-65	200	108	**MS17985C821**	4211.F21
1/2	0.4970	0.4985	**2.2**	0.594 inch	0.460	0.565	0.800	2.345	1.60	0.885	0.5050	36,900	-65	200	108	**MS17985C822**	4211.F22
1/2	0.4970	0.4985	**2.3**	0.594 inch	0.460	0.565	0.800	2.345	1.60	0.885	0.5050	36,900	-65	200	114	**MS17985C823**	4211.F23
1/2	0.4970	0.4985	**2.4**	0.594 inch	0.460	0.565	0.800	2.345	1.60	0.885	0.5050	36,900	-65	200	118	**MS17985C824**	4211.F24
1/2	0.4970	0.4985	**2.5**	0.594 inch	0.460	0.565	0.800	2.345	1.60	0.885	0.5050	36,900	-65	200	117	**MS17985C825**	4211.F25
1/2	0.4970	0.4985	**2.6**	0.594 inch	0.460	0.565	0.800	2.345	1.60	0.885	0.5050	36,900	-65	200	132	**MS17985C826**	4211.F26
1/2	0.4970	0.4985	**2.8**	0.594 inch	0.460	0.565	0.800	2.345	1.60	0.885	0.5050	36,900	-65	200	136	**MS17985C828**	4211.F28
1/2	0.4970	0.4985	**2.9**	0.594 inch	0.460	0.565	0.800	2.345	1.60	0.885	0.5050	36,900	-65	200	130	**MS17985C829**	4211.F29
1/2	0.4970	0.4985	**3.1**	0.594 inch	0.460	0.565	0.800	2.345	1.60	0.885	0.5050	36,900	-65	200	135	**MS17985C831**	4211.F31
1/2	0.4970	0.4985	**3.3**	0.594 inch	0.460	0.565	0.800	2.345	1.60	0.885	0.5050	36,900	-65	200	138	**MS17985C833**	4211.F33
1/2	0.4970	0.4985	**3.4**	0.594 inch	0.460	0.565	0.800	2.345	1.60	0.885	0.5050	36,900	-65	200	143	**MS17985C834**	4211.F34
1/2	0.4970	0.4985	**3.5**	0.594 inch	0.460	0.565	0.800	2.345	1.60	0.885	0.5050	36,900	-65	200	147	**MS17985C835**	4211.F35
1/2	0.4970	0.4985	**3.6**	0.594 inch	0.460	0.565	0.800	2.345	1.60	0.885	0.5050	36,900	-65	200	144	**MS17985C836**	4211.F36
1/2	0.4970	0.4985	**3.7**	0.594 inch	0.460	0.565	0.800	2.345	1.60	0.885	0.5050	36,900	-65	200	146	**MS17985C837**	4211.F37
1/2	0.4970	0.4985	**4.0**	0.594 inch	0.460	0.565	0.800	2.345	1.60	0.885	0.5050	36,900	-65	200	161	**MS17985C840**	4211.F40
1/2	0.4970	0.4985	**4.2**	0.594 inch	0.460	0.565	0.800	2.345	1.60	0.885	0.5050	36,900	-65	200	165	**MS17985C842**	4211.F42
1/2	0.4970	0.4985	**4.3**	0.594 inch	0.460	0.565	0.800	2.345	1.60	0.885	0.5050	36,900	-65	200	169	**MS17985C843**	4211.F43
1/2	0.4970	0.4985	**4.4**	0.594 inch	0.460	0.565	0.800	2.345	1.60	0.885	0.5050	36,900	-65	200	173	**MS17985C844**	4211.F44
1/2	0.4970	0.4985	**4.5**	0.594 inch	0.460	0.565	0.800	2.345	1.60	0.885	0.5050	36,900	-65	200	175	**MS17985C845**	4211.F45
1/2	0.4970	0.4985	**4.7**	0.594 inch	0.460	0.565	0.800	2.345	1.60	0.885	0.5050	36,900	-65	200	177	**MS17985C847**	4211.F47
1/2	0.4970	0.4985	**4.8**	0.594 inch	0.460	0.565	0.800	2.345	1.60	0.885	0.5050	36,900	-65	200	180	**MS17985C848**	4211.F48
1/2	0.4970	0.4985	**5.0**	0.594 inch	0.460	0.565	0.800	2.345	1.60	0.885	0.5050	36,900	-65	200	185	**MS17985C850**	4211.F50
1/2	0.4970	0.4985	**5.5**	0.594 inch	0.460	0.565	0.800	2.345	1.60	0.885	0.5050	36,900	-65	200	–	**MS17985C855**	4211.F55
1/2	0.4970	0.4985	**6.4**	0.594 inch	0.460	0.565	0.800	2.345	1.60	0.885	0.5050	36,900	-65	200	217	**MS17985C864**	4211.F64
1/2	0.4970	0.4985	**8.0**	0.594 inch	0.460	0.565	0.800	2.345	1.60	0.885	0.5050	36,900	-65	200	–	**MS17985C880**	4211.F80
1/2	0.4970	0.4985	**9.0**	0.594 inch	0.460	0.565	0.800	2.345	1.60	0.885	0.5050	36,900	-65	200	–	**MS17985C890**	4211.F90
9/16	0.5595	0.5610	**1.0**	0.666 inch	0.510	0.565	0.800	2.345	1.60	0.885	0.5675	46,700	-65	200	120	**MS17985C910**	4211.G10
9/16	0.5595	0.5610	**1.2**	0.666 inch	0.510	0.565	0.800	2.345	1.60	0.885	0.5675	46,700	-65	200	124	**MS17985C912**	4211.G12
9/16	0.5595	0.5610	**1.7**	0.666 inch	0.510	0.565	0.800	2.345	1.60	0.885	0.5675	46,700	-65	200	112	**MS17985C917**	4211.G17
9/16	0.5595	0.5610	**2.4**	0.666 inch	0.510	0.565	0.800	2.345	1.60	0.885	0.5675	46,700	-65	200	–	**MS17985C924**	4211.G24
9/16	0.5595	0.5610	**3.2**	0.666 inch	0.510	0.565	0.800	2.345	1.60	0.885	0.5675	46,700	-65	200	160	**MS17985C932**	4211.G32
9/16	0.5595	0.5610	**3.6**	0.666 inch	0.510	0.565	0.800	2.345	1.60	0.885	0.5675	46,700	-65	200	173	**MS17985C936**	4211.G36
9/16	0.5595	0.5610	**4.0**	0.666 inch	0.510	0.565	0.800	2.345	1.60	0.885	0.5675	46,700	-65	200	189	**MS17985C940**	4211.G40
9/16	0.5595	0.5610	**5.0**	0.666 inch	0.510	0.565	0.800	2.345	1.60	0.885	0.5675	46,700	-65	200	–	**MS17985C950**	4211.G50

Nominal diameter A [inch]	A min. [inch]	A max. [inch]	Clamping length L +0.02 0 [inch]	Dimensions B ±0.005	C 0 -0.04 [inch]	D max. [inch]	E max. [inch]	F max. [inch]	G max. [inch]	H min. [inch]	Location hole max. [inch]	Shearing resistance, two-shear min. [lbf]	min. [°F]	max. [°F]	[g]	Standard description	Art. No.
9/16	0.5595	0.5610	**5.5**	0.666 inch	0.510	0.565	0.800	2.345	1.60	0.885	0.5675	46,700	-65	200	–	**MS17985C955**	4211.G55
9/16	0.5595	0.5610	**6.1**	0.666 inch	0.510	0.565	0.800	2.345	1.60	0.885	0.5675	46,700	-65	200	252	**MS17985C961**	4211.G61
5/8	0.6220	0.6240	**6.0**	0.750 mm	0.580	0.580	0.975	3.100	1.70	0.980	0.6300	57,800	-65	200	–	**MS17985C1060**	4211.H60
3/4	0.7470	0.7485	**4.0**	0.887 mm	0.670	0.700	1.000	3.100	1.72	1.030	0.7570	83,200	-65	200	–	**MS17985C1240**	4211.K40

Compliance

RoHS compliant
Compliant according to Directive 2011/65/EU and Directive 2015/863

Does not contain SVHC substances
No SVHC substances with more than 0.1% w/w contained - SVHC list [REACH] as of 10.06.2022

Does not contain Proposition 65 substances
No Proposition 65 substances included
https://www.P65Warnings.ca.gov/

Free from Conflict Minerals
This product does not contain any substances designated as "conflict minerals" such as tantalum, tin, gold or tungsten from the Democratic Republic of Congo or adjacent countries.