GRIGIO TENSIONER UNITS

TC2 TECNIDEA CIDUE S.r.l.

Elastic Elements – Type: **GPRP - GPRU** / Elementi Elastici – Tipo: **GPRP – GPRU**

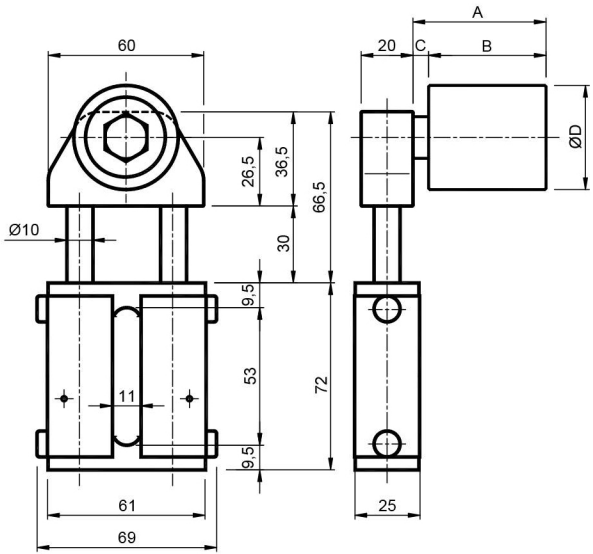

MATERIALS Body is made of aluminum. Columns made of steel. Caps, junctions and plate are made of plastic. RU: roller made of steel.
TREATMENTS Galvanized metallic components.

MATERIALI *Corpo in alluminio. Colonne in acciaio. Tappi, unioni e piastrina in plastica. RP: Rullo in plastica / RU: Rullo in acciaio*
TRATTAMENTI *Componenti metallici zincati*

Type *Tipo*	Cod. N°	A	B	C	ØD	Newton max	Max rpm *Numero di giri max*	Bearing *Cuscinetto*	Weight *Peso* [kg]
GP10RU1	AS011680	38	35	3	30	158	15000	608	0,40
GP10RU2/3	AS011681	51	45	6	40	158	12000	6200	0,61