3/4 EXTENSION SLIDE GS-ESR2 Under-mount Type

LOAD CAPACITY 49~78 N/pc | L=R | FRICTION | DETACH | SUS

- 3/4 extension (2 members).
- Installed to the bottom of the drawer.
- The drawer can be stopped at any position by the resistance of the ball retainer. The drawer can be detached by pulling outward.

[Remarks]

- Be sure to read the "Cautions"

[Application Example]

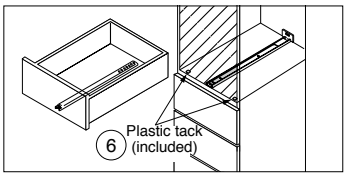

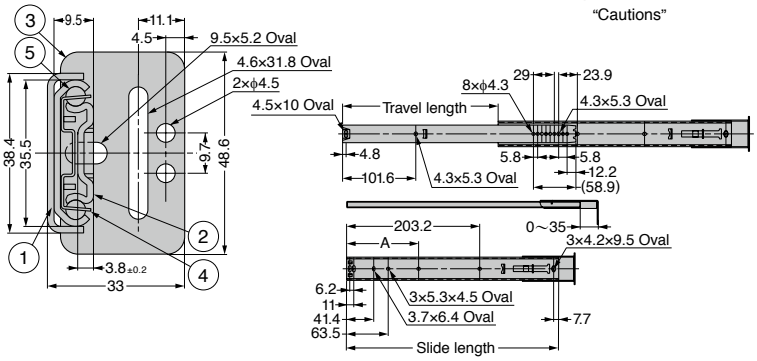

No.	Part Name	Material	Finish
①	Outer Member	Stainless Steel (SUS304)	Plain
②	Inner Member		
③	Bracket		
④	Retainer		
⑤	Balls		–
⑥	Plastic Tack	Plastic	

Sold by piece.

Item Name	Slide length	Travel length	A	Load Capacity N/pc	Load Capacity kgf/pc	Weight (kg/pc)
GS-ESR2-12	323.8	215.9	109.9	78	8	0.4
GS-ESR2-14	374.6	266.7	160.7	74	7.5	0.43
GS-ESR2-16	425.4	304.8	–	69	7	0.48
GS-ESR2-18	476.2	317.5	262.3			0.53
GS-ESR2-20	527	368.3	313.1	64	6.5	0.57
GS-ESR2-22	577.8	419.1	363.9	59	6	0.62
GS-ESR2-24	628.6	444.5	414.7	54	5.5	0.66
GS-ESR2-26	679.4	495.3	465.5	49	5	0.71