RECESSED PULL GS-UTZ-130

[Parts Included]

- Truss head screw M4 × 8
- Spacer

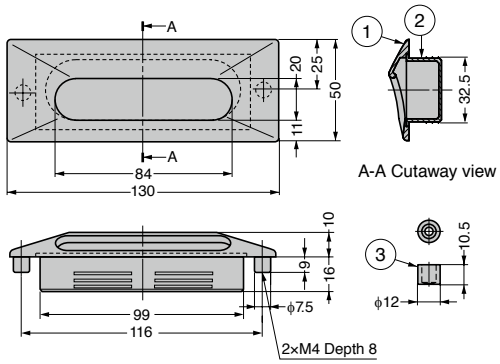

[Cut Out Dimensions]

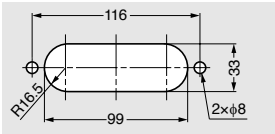

[Installation]

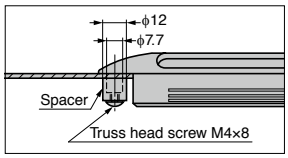

No.	Part Name	Material	Finish/Colour
①	Body	Zinc Alloy (ZDC)	Chrome, Satin Nickel, Bronze
②	Cup	Plastic (HIPS)	Black
③	Spacer	Steel (SUM)	Coloured Zinc Chromate

Item Name	Finish	Weight (g)
GS-UTZ-130WB	Satin Nickel	105
GS-UTZ-130CR	Chrome	