FLUSH SLAM LATCH GS-LC-65A

- Pull paddle handle to open.
- Door will be latched when closed.
- Mounting screws are invisible from door surface.
- Easy installation. Insert the latch body through cut out section and simply screw-on the back plate.
- Latching margin: 5mm (Small R is required at the corners on the frame side)

[Remarks]

- Please contact us when using other than the recommended door thickness.

[Parts Included]

- Pan head screw M4 × 8 (SUS)

[Application Example]

[Installation]

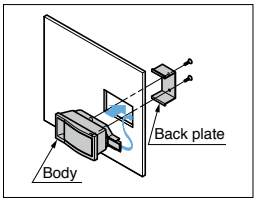

[Cut Out Dimensions]

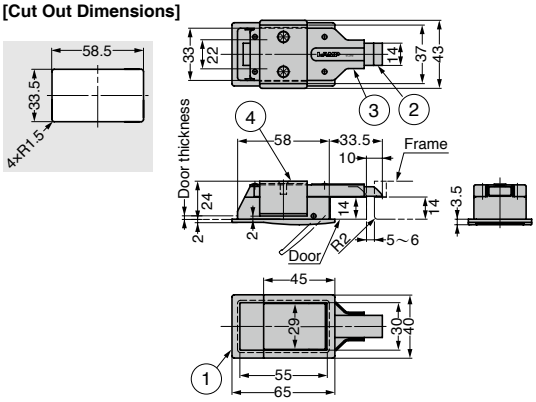

No.	Part Name	Material	Finish / Colour
①	Body	Aluminium Alloy	Silver
②	Latch Bolt	POM	White
③	Cover	Stainless Steel (SUS304)	Barrel Polished
④	Back plate		

Item Name	Door Thickness	Weight (g)
GS-LC-65A	2~3.2	108