TWIN WHEEL CASTER GS-FPU55P Plate Type

LOAD CAPACITY 490 N

- Wheels are coated in elastomer which absorbs vibration and gives an extra smooth and quiet movement.
- With red indicator to show locked state.

[Remarks]

- Push the stopper to handle. Red lock indicator means locked state.
- The load capacities in the table below indicate the loads when moving on a smooth surface.

Caster bracket GS-FA55-FIX to lock swivel available.

Item Name	Type	Load Capacity N/pc	Load Capacity kgf/pc	Weight (g)
GS-FPU55PSR	With Brake	490	50	151
GS-FPU55PR	Without Brake			146

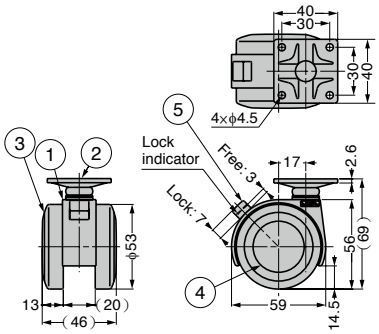

Drawing above shows the model with brake.

No.	Part Name	Material	Finish/Colour
①	Body	PA	Black
②	Plate	Steel (SPCC)	Coloured Zinc Chromate
③	Wheel	PA + Elastomer (TPE)	Black
④	Cover	PA	
⑤	Stopper		Black + Red