TWIN WHEEL CASTER GS-FP45P Plate Type

LOAD CAPACITY 392 N

- With red indicator to show locked state.

[Remarks]

- Push the stopper to handle. Red lock indicator means locked state.
- The load capacities in the table below indicate the loads when moving on a smooth surface.

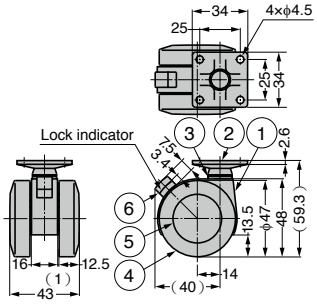

Drawing above shows the model with brake.

Item Name	Type	Load Capacity N/pc	Load Capacity kgf/pc	Weight (g)
GS-FP45PSR	With Brake	392	40	98
GS-FP45PR	Without Brake			94

No.	Part Name	Material	Finish/Colour
①	Body	PA	Black
②	Plate	Steel (SPCC)	Coloured Zinc Chromate
③	Shaft	Steel (SWCH)	
④	Wheel	PA	Black
⑤	Cover		
⑥	Stopper		Black, Red