TWIN WHEEL CASTER GS-BR Threaded Bolt Type

LOAD CAPACITY 294~392 N

w/o Brake w/ Brake

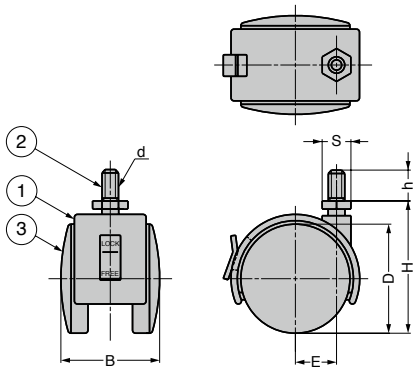

Drawing above shows the model with brake.

No.	Part Name	Material	Finish/Colour
①	Body	PA	Black
②	Threaded Bolt	Steel (SPHC)	Clear Zinc Chromate (Trivalent)
③	Wheel	PA	Black

Item Name	Type	D	H	h	B	E	S	d	Load Capacity N/pc	Load Capacity kgf/pc	Weight (g)
GS-BR-20N8S	With brake	45	54	15	42	16	14	M8	294	30	79
GS-BR-20N8	Without brake										69
GS-BR-25N8S	With brake	53	64		48	20			392	40	117
GS-BR-25N8	Without brake										106
GS-BR-25N3S	With brake							W3/8			119
GS-BR-25N3	Without brake										108